A-MAX

Product Catalogue

ELECTRICAL & HARDWARE SUPPLIER MALAYSIA

Version : August 2026

Table of Contents

A-MAX PRODUCTS CATEGORY .....

GI Bar Saddle 3

GI Half Saddle 4

Trunking Bracket 5-6

Copper Earth Link 7-8

Flexible Adaptor 9

Clip 10-11

L Channel clip..... 12

G Clip & Ceiling Clip 13

Rooftop Clip 14

Conduit Clip 15

Tiger Beam Clamp 16

BC 200 Beam Clamp 17

Beam Clamp & U Bracket 18-19

Beam Clamp (Cast Iron) 20

BC Spring Steel Beam Clamp 21

Unistrut Clamp 22

Fan Hook 23

Copper Bush 24

Socket (NT) 25

Socket 26

Papaya Bracket 27-29

Wedge Nut 30

Lid Cover 31

Screw & Nut..... 32-34

Washer 35

Conduit Accessories 36-38

GI BAR SADDLE

A-MAX 19mm GI Bar Saddle

A-MAX 20mm GI Bar Saddle

A-MAX 25mm GI Bar Saddle

A-MAX GI Bar Saddle

Brand : A-MAX
Material : EG Sheet
Country : Made in Malaysia
Description :

- Heavy gauge material saddle to secure conduit length to surface.
- Installation during the process of construction, electrical equipment, electrical component etc.
- Easy to equip, long life & for use.
- Protection against impact at all temperatures.

GI HALF SADDLE

A-MAX 19mm GI Half Saddle (Premium)

Zinc Plated

(Thickness : 1.2mm)

A-MAX 25mm GI Half Saddle

Zinc Plated

(Thickness : 1.2mm)

{ Zinc Plated or Stainless Steel }

A-MAX Stainless Steel SUS
19mm Half Saddle (Premium)

(Thickness : 1.2mm)

A-MAX Stainless Steel SUS
25mm Half Saddle (Premium)

(Thickness : 1.2mm)

A-MAX GI Half Saddle (Premium)

Brand : A-MAX
Material : GI Sheet / Stainless Steel
Thickness : 1.2mm
Country : Made in Malaysia
Description :

- Heavy gauge material saddle to secure conduit length to surface.
- Installation during the process of construction, electrical equipment, electrical component etc.
- Easy to equip, long life & for use and protection against impact at all temperatures.

TRUNKING BRACKET

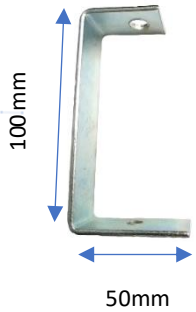

A-MAX 2”x2” Trunking Bracket
50mm(L) x 25mm(W) x 100mm(H)
2.8mm(thickness) x 25mm(W) flat bar

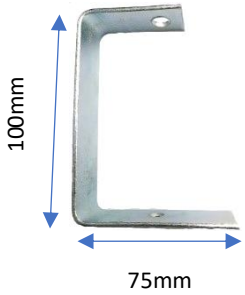

A-MAX 2”x3” Trunking Bracket
75mm(L) x 25mm(W) x 100mm(H)
2.8mm(thickness) x 25mm(W) flat bar

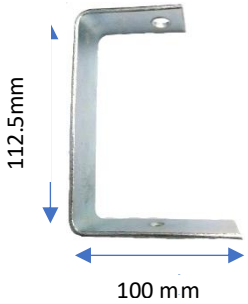

A-MAX 2”x4” Trunking Bracket
100mm(L) x 32mm(W) x 112.5mm(H)
2.8mm(thickness) x 32mm(W) flat bar

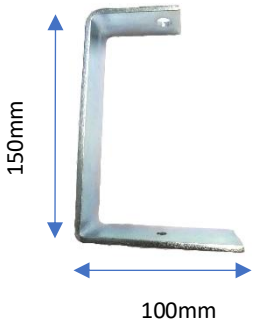

A-MAX 3”x4” / 4”x4” Trunking Bracket
100mm(L) x 32mm(W) x 150mm(H)
4.5mm(thickness) x 32mm(W) flat bar

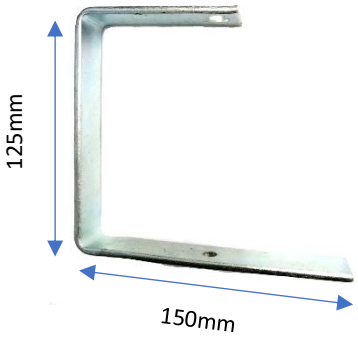

A-MAX 3”x6” Trunking Bracket (Eco)
150mm(L) x 25mm(W) x 125mm(H)
4.5mm(thickness) x 25mm(W) flat bar

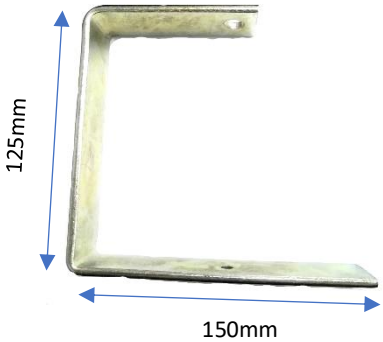

A-MAX 3”x6” Trunking Bracket (Premium)
150mm(L) x 32mm(W) x 125mm(H)
4.5mm(thickness) x 32mm(W) flat bar

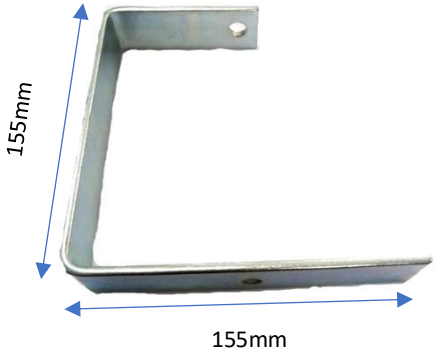

A-MAX 4"x6" Trunking Bracket
155mm(L) x 32mm(W) x 155mm(H)
4.5mm(thickness) x 32mm(W) flat bar

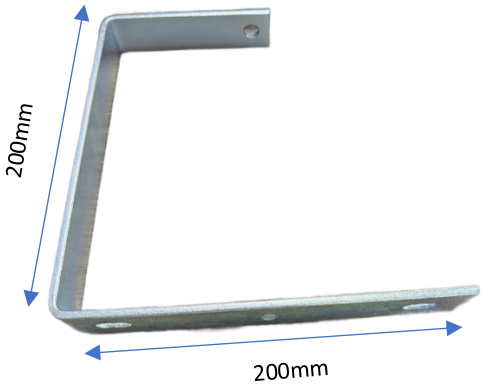

A-MAX 6"x8" Trunking Bracket
200mm(L) x 32mm(W) x 200mm(H)
4.5mm(thickness) x 32mm(W) flat bar

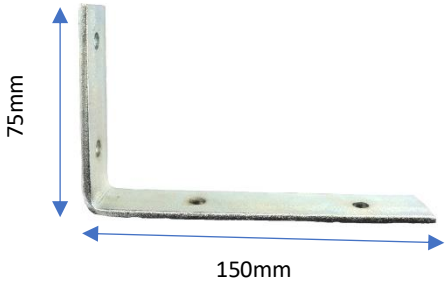

A-MAX 3"x6" L Bracket
150mm(L) x 24mm(W) x 75mm(H)
4.5mm(thickness) x 24mm(W) flat bar

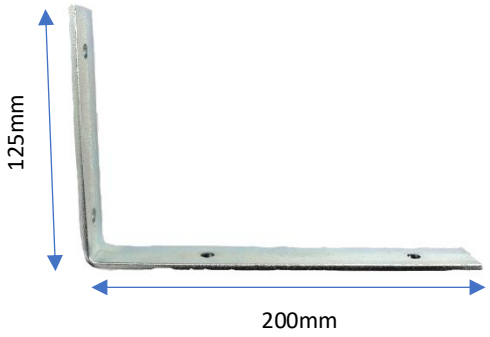

A-MAX 5"x8" L Bracket
200mm(L) x 25mm(W) x 125mm(H)
4.5mm(thickness) x 25mm(W) flat bar

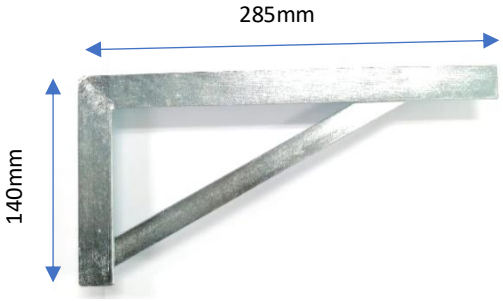

A-MAX 140mm x 285mm L Bracket
(Heavy Duty)
285mm(L) x 24mm(W) x 140mm(H)

A-MAX Trunking Bracket

Brand : A-MAX
Material : Flat bar
Finishing : Zinc plated
Country : Made in Malaysia
Description :

- For the purpose of holding metal trunking.

COPPER EARTH LINK

A-MAX Copper Earth Link
19mm x 1mm x 75mm

A-MAX Copper Earth Link
19mm x 1.6mm ±0.1mm x 75mm

A-MAX Copper Earth Link
20mm x 0.8mm ±0.1mm x 75mm

A-MAX Copper Earth Link
25mm x 0.8mm x 75mm

A-MAX Copper Earth Link
25mm x 1.6mm x 75mm

A-MAX Copper Earth Link
25mm x 3mm x 75mm

A-MAX Copper Earth Link
19mm x 0.5mm x 75mm

A-MAX Copper Earth Link
19mm x 1.2mm x 75mm

Sample of packing

Size	Standard Packing (pcs)
19mm x 1mm x 75mm	100pcs / pkt
19mm x 1.6mm ±0.1mm x 75mm	100pcs / pkt
19mm x 0.5mm x 75mm	100pcs / pkt
19mm x 1.2mm x 75mm	100pcs / pkt
20mm x 0.8mm ±0.1mm x 75mm	100pcs / pkt
25mm x 0.8mm x 75mm	100pcs / pkt
25mm x 1.6mm x 75mm	100pcs / pkt
25mm x 3mm x 75mm	50pcs / pkt

A-MAX Copper Earth Link

Brand : A-MAX
Material : 100% Pure Copper
Country : Made in Malaysia
Propertise : High Power Electric Transmission

Description :

- Copper Earth Link is important when connecting the metal steel/stainless steel/hot dipped galvanised trunking/tray/ladder during installation.
- Copper Earth Link provide connectivity of body earth along the whole installation wiring system and it is for connecting to ground earth by installer.
- Copper Earth Link is very essential to protect any incident from electricity leakage that may danger to humans.

FLEXIBLE ADAPTOR

A-MAX ¾" GI Flexible Adaptor c/w Lock Nut

A-MAX 25mm GI Flexible Adaptor c/w Lock Nut

A-MAX 20mm GI Flexible Adaptor c/w Lock Nut

A-MAX 1" GI Flexible Adaptor c/w Lock Nut

A-MAX GI Flexible Adaptor

Brand : A-MAX
Material : Aluminium
Country : Made in Malaysia
Description :

- For electrical flexible conduit use.

CLIP

A-MAX K12 Clip
(Zinc Plated)

A-MAX K16 Clip
(Zinc Plated)

A-MAX K20 Clip
(Zinc Plated)

A-MAX K Clip (Zinc Plated)

Brand : A-MAX
Material : Spring steel
Finishing : Zinc Plated
Description :

- Support conduit to rod, wire or flange.
- No installation tools required.

A-MAX K12 Clip
(Grey - Dacromet Surface)

A-MAX K16 Clip
(Grey - Dacromet Surface)

A-MAX K20 Clip
(Grey - Dacromet Surface)

A-MAX K Clip (Grey – Dacromet Surface)

Brand : A-MAX
Material : Spring steel
Finishing : Dacromet Surface Treatment
Description :

- Support conduit to rod, wire or flange.
- No installation tools required.

L CHANNEL CLIP

A-MAX 1/4” L Channel Clip 二分
2.8mm (thickness) x 25mm (W)
nut size : 1/4”

A-MAX 5/16” L Channel Clip 二分半
2.8mm (thickness) x 25mm (W)
nut size : 5/16”

A-MAX 3/8” L Channel Clip 三分
2.8mm (thickness) x 25mm (W)
nut size : 3/8”

A-MAX 1/2” L Channel Clip (Eco)半寸
2.3mm (thickness) x 25mm (W)
nut size : 1/2”

A-MAX 1/2” L Channel Clip (Premium) 半寸
2.8mm (thickness) x 32mm (W)
nut size : 1/2”

G CLIP

A-MAX 3/8" G Clip
2.8mm (thickness) x 25mm (W)

A-MAX 1/2" G Clip (Premium)
2.9mm (thickness) x 31mm (W)

CEILING CLIP

A-MAX J Hook (Ceiling Clip)
1mm (thickness) x 23mm (W)

A-MAX Clip

Brand : A-MAX
Material : Flat bar with nut (L Channel Clip) , GI (J Hook & G Clip)
Finishing : Zinc plated (L Channel Clip & G Clip)
Country : Made in Malaysia
Description :

- Support conduit to rod.
- No installation tools required.

ROOFTOP CLIP

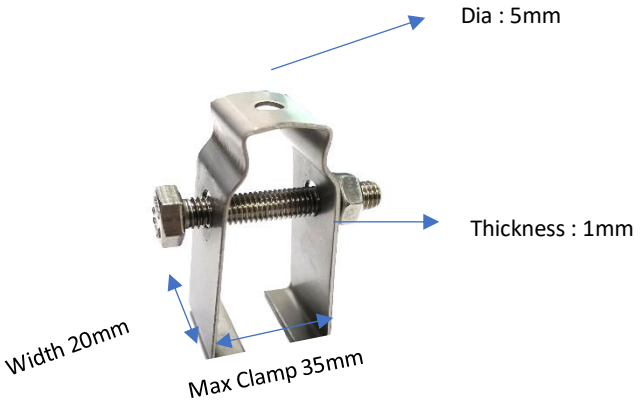

A-MAX Stainless Steel Rooftop Clip (SS304)

A-MAX Stainless Steel Rooftop Clip (SS304)

Brand : A-MAX
Material : Stainless Steel SS304
Bolt & Nut : M6 x 40mm
Hole Dia : 5mm
Max Clamp : 35mm
Description :

- For lightning protection system.
- Used as roof clip to secure clamp to roof truss.
- Use without screw fixing to metal roof truss.

CONDUIT CLIP

A-MAX 3/4" Conduit Clip
1.5mm (thickness) x 19mm (W)

GI

or

A-MAX 1" Conduit Clip
1.5mm (thickness) x 19mm (W)

Stainless Steel

A-MAX 3/4" Wing Screw Conduit Clip
1.5mm (thickness) x 21mm (W)

A-MAX 1" Wing Screw Conduit Clip
1.5mm (thickness) x 21mm (W)

{ GI or Stainless Steel }

A-MAX Conduit Clip

Brand : A-MAX
Material : GI / Stainless Steel
Country : Made in Malaysia
Description :

- Support conduit to rod.
- No installation tools required.

TIGER BEAM CLAMP

A-MAX Tiger Beam Clamp 9-22MM

A-MAX Tiger Beam Clamp 9-33MM

A-MAX 19mm & 25mm Conduit Clip

Sample – Tiger Beam Clamp + Conduit Clip (Tiger Beam Clamp)

A-MAX Tiger Beam Clamp 9-22MM & 9-33MM

Material : Mild steel
Finishing : Zinc plated
Description :

- Use to hang conduit or cable from wall and ceiling.
- Supplies with cup point bolts screw, easy installation to beam flange.

A-MAX 19mm & 25mm Conduit Clip (Tiger Beam Clamp)

Material : Mild steel
Finishing : Zinc plated
Description :

- This is used to associate with the main Tiger Beam Clamp.
- Suitable for 19mm & 25mm conduit.

BC 200 BEAM CLAMP

A-MAX BC200 Beam Clamp

A-MAX 1/2" CD0B Conduit Clamp (DIA 17-22MM)

A-MAX 3/4" CD1B Conduit Clamp (DIA 19-25MM)

Sample – BC 200 Beam Clamp + Conduit Clamp

A-MAX BC 200 Beam Clamp

Material : Mild steel
Finishing : Zinc plated
Description :

- Use to hang conduit or cable from wall and ceiling.
- Supplies with screw, easy installation to beam flange.

A-MAX ½ " (DIA 17-22MM)& ¾" (DIA 19-25MM) Conduit Clamp (BC 200 Beam Clamp)

Material : Mild steel
Finishing : Zinc plated
Description :

- This is used to associate with the main BC 200 Beam Clamp.
- Suitable for ½ ” (Dia17-22MM) & ¾ ” (Dia 19-25MM) conduit.

BEAM CLAMP

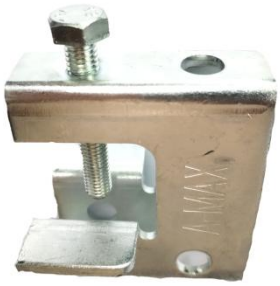

Mild Steel

or

Stainless Steel

A-MAX 3/8" Beam Clamp (Heavy Duty)

A-MAX 1/2" Beam Clamp (Heavy Duty)

{ Mild Steel or Stainless Steel }

A-MAX Beam Clamp (Heavy Duty)

Material : Mild steel / **Stainless Steel** (SUS)
Finishing : Zinc plated
Description :

- Beam clamp is universal type to secure clamp the beam for hanging stud rod, devices and etc without actual tapping screw to the beam that may deviate the strength of the beam.

U BRACKET

Mild Steel

or

Stainless Steel

A-MAX 3/8" U Bracket
(Heavy Duty Beam Clamp)
2.7mm(L) x 3mm(W) x 6.3mm(H)
3mm (thickness)
Dia : 3/8"

A-MAX 1/2" U Bracket
(Heavy Duty Beam Clamp)
2.7mm(L) x 3mm(W) x 6.3mm(H)
3mm (thickness)
Dia : 1/2"

{ Mild Steel or Stainless Steel }

Sample
Beam Clamp (Heavy Duty) + U Bracket

A-MAX U Bracket (Heavy Duty Beam Clamp)

Description :

- This is used to associate with the main Beam Clamp (Heavy Duty).

BEAM CLAMP (CAST IRON)

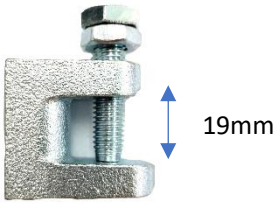

A-MAX 19mm Beam Clamp (Cast Iron)
Weight : 140g

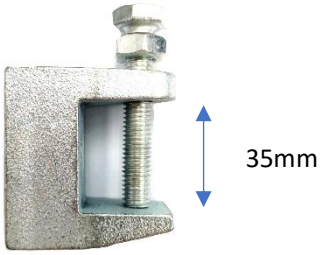

A-MAX 35mm Beam Clamp (Cast Iron)
Weight : 270g

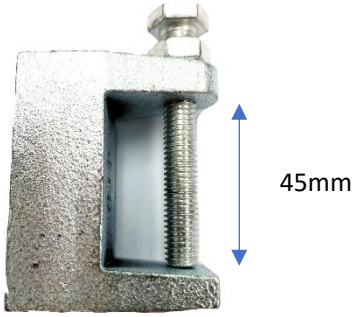

A-MAX 45mm Beam Clamp (Cast Iron)
Weight : 320g

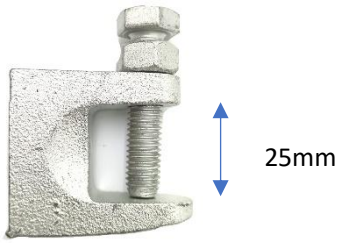

A-MAX 25mm Beam Clamp Cast Iron
(Dacromet Surface)
Weight : 140g

Beam Clamp (Cast Iron / Dacromet Surface)

Material : Malleable Cast Iron
Finishing : Zinc plated / Dacromet Surface
Description :

- Beam clamp is universal type to secure clamp the beam for hanging stud rod, devices and etc without actual tapping screw to the beam that may deviate the strength of the beam.

BC SPRING STEEL BEAM CLAMP

A-MAX BC Spring Steel Beam Clamp (Dacromet Surface)

A-MAX BC Spring Steel Beam Clamp (Dacromet Surface)

Material : Spring steel
Finishing : Dacromet Surface Treatment
Description :

- Beam clamp is universal type to secure clamp the beam for hanging stud rod, devices and etc without actual tapping screw to the beam that may deviate the strength of the beam.

UNISTRUT CLAMP

A-MAX 20mm Unistrut Clamp (Conduit)

A-MAX 25mm Unistrut Clamp (Conduit)

A-MAX 32mm Unistrut Clamp (Conduit)

A-MAX Unistrut Clamp

Brand : A-MAX
Material : GI
Finishing : Zinc plated
Country : Made in Malaysia

FAN HOOK

A-MAX 122 Fan Hook

A-MAX 122 Fan Hook

Brand : A-MAX
Material : GI
Finishing : Zinc plated
Country : Made in Malaysia

COPPER BUSH

A-MAX 20mm Copper Bush
(Brass)

A-MAX 3/4" Copper Bush
(Brass)

A-MAX 1" Copper Bush
(Brass)

A-MAX 25mm Copper Bush
(Brass)

SOCKET (Non-Thread)

A-MAX 19mm GI Socket (NT)

A-MAX 25mm GI Socket (NT)

A-MAX 20mm GI Socket (NT)

A-MAX 19mm GI Socket (NT)
c/w 2pcs Screw

A-MAX 20mm GI Socket (NT)
c/w 2pcs Screw

A-MAX 25mm GI Socket (NT)
c/w 2pcs Screw

SOCKET

A-MAX ¾ " GI Socket

A-MAX 20mm GI Socket

A-MAX 25mm GI Socket

A-MAX 1” GI Socket

PAPAYA BRACKET

A-MAX 3/4" Papaya Bracket
3/4"(OD) x 1.2mm(thickness) x 18mm(W)

A-MAX 1" Papaya Bracket
1"(OD) x 1.2mm(thickness) x 18mm(W)

A-MAX 1 ¼" Papaya Bracket
1 ¼"(OD) x 1.2mm(thickness) x 18mm(W)

A-MAX 1 ½" Papaya Bracket
1 ½"(OD) x 1.2mm(thickness) x 18mm(W)

A-MAX 2” Papaya Bracket
2”(OD) x 1.2mm(thickness) x 18mm(W)

A-MAX 2 ½” Papaya Bracket
2 ½”(OD) x 1.5mm(thickness) x 20mm(W)

A-MAX 3” Papaya Bracket
3”(OD) x 1.5mm(thickness) x 20mm(W)

A-MAX 4” Papaya Bracket
4”(OD) x 2.0mm(thickness) x 21mm(W)

A-MAX 5" Papaya Bracket
5"(OD) x 2.0mm(thickness) x 21mm(W)

A-MAX 6" Papaya Bracket
6"(OD) x 2.4mm(thickness) x 24mm(W)

A-MAX 8" Papaya Bracket
8"(OD) x 2.4mm(thickness) x 24mm(W)

A-MAX Papaya Bracket

Brand : A-MAX
Material : GI
Country : Made in Malaysia

WEDGE NUT

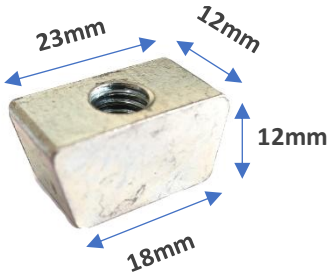

A-MAX 5/16" Wedge Nut

A-MAX 3/8" Wedge Nut

A-MAX M10 Wedge Nut (mm size)

A-MAX M8 Wedge Nut (mm size)

A-MAX Wedge Nut

Brand : A-MAX
Finishing : Zinc plated
Size : Dia 5/16" , 3/8" , 10mm , 8mm
Country : Made in Malaysia
Description :

- Suitable for holding heavy structures i.e. pipe, cabling and etc.
- Internally threaded for quick and convenient fixing with all thread rod from ceiling.

LID COVER

A-MAX GI Lid Cover

A-MAX GI Lid Cover (32mm)

(For 32mm GI Accessories Use)

A-MAX GI Lid Cover

Brand : A-MAX
Material : GI sheet or EG sheet
Country : Made in Malaysia
Description :

- For 19mm to 25mm conduit accessories use.

SCREW & NUT

A-MAX M6 Spring Nut

A-MAX M8 Spring Nut

A-MAX M10 Spring Nut

A-MAX M12 Spring Nut

A-MAX Spring Nut

Brand : A-MAX
Finishing : Zinc plated
Size : Dia 6mm, 8mm, 10mm & 12mm

A-MAX 5/32 x 6mm Lid Cover Screw

A-MAX 5/32 x 10mm Dome Cover Screw

A-MAX #8x1" Tapping Screw (Flat Head)
(Weight : 1.850kg)

A-MAX #8x1 -1/4" (32MM) Tapping Screw (Flat Head)
(Weight : 2.310kg)

Sample – Used of Tapping Screw

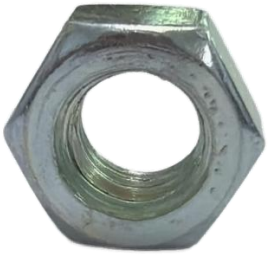

A-MAX 3/8" Hexagon Nut

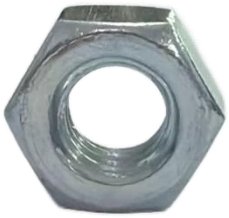

A-MAX 5/16" Hexagon Nut

A-MAX Hexagon Nut

Brand : A-MAX

Material : Carbon Steel

Finishing : Zinc plated

Size : 3/8" & 5/16"

Thickness : 3/8" (T: 8.2mm) & 5/16" (T: 6.5mm)

Description :

- Secure bolt and threaded rod to create strong and reliable joints.

WASHER

A-MAX 3/8” & M10 Washer

A-MAX 5/16” & M8 Washer

A-MAX Washer

Brand : A-MAX

Material : Carbon Steel

Finishing : Zinc plated

Size : 3/8” & M10; 5/16” & M8

Thickness : 3/8” & M10 (T: 2.3mm) ; 5/16” & M8 (T: 1.5mm)

Description :

- Improve the strength & durability of the connection.
- Prevent from loosening and distribute loads evenly.

CONDUIT ACCESSORIES

A-MAX GI 1 Way Box

A-MAX GI 2 Way Box

A-MAX GI 3 Way Box

A-MAX GI 4 Way Box

A-MAX GI Angle Box

A-MAX GI Dome Cover

A-MAX GI Elbow

A-MAX GI Long Bend

A-MAX GI Inspection Tee

A-MAX GI Reducer

A-MAX GI Flexible Adaptor

A-MAX GI Lock Nut

A-MAX GI Lid Cover

A-MAX GI Lid Cover

(For 32mm GI Accessories Use)

A-MAX Extension Ring

A-MAX Conduit Accessories

Brand : A-MAX
Material : Aluminium
Finishing : Matte colour
Country : Made in Malaysia
Size :

- 19mm
- 19mm (Non Thread)
- 20mm (JKR Spec)
- 20mm (Non Thread)
- 25mm (JKR Spec)
- 25mm (Non Thread)